a no-compromise, multiband, low-VSWR dipole

Back-to-basics design uses capacitor divider/balun for high-efficiency operation

In searching for an effective, balanced feed system for a dipole, I developed an antenna that's efficient, exhibits low VSWR across several bands at the same time, and meets my original objectives. Patented under the title, "Dipole of Delight," its design is based on the use of a capacitive balun at the center of the dipole.[1,2,3]

The use of capacitors at the midpoint of the dipole allows the resonance currents in the dipole to reach larger amplitudes than are possible when the 50-ohm cable impedance is present as a series resistance. Apart from the copper loss, the principal limitation of resonant currents is the radiation loss. For this reason the capacitor dipole is highly efficient and has a very wide bandwidth.

Before studying the details, one should review the problems associated with the traditional half-wave dipole (see **fig. 1**), which are chiefly:

- an unbalance that causes an undesirable current on the outside of the shield results in higher levels of electrical noise from local sources on receive, and on transmit provokes annoying rf voltages at the transceiver (i.e., microphone feedback or finger burns); and
- matching problems between free-space impedance (377 ohms), a typical traveling wave on a wire dipole (800 ohms), and the feedpoint impedance of a half-wave dipole, said to be 73 + j 42 ohms.[4]

The first problem experienced with the conventional dipole has traditionally been solved by using a balanced feedline or a transformer balun. Unfortunately, use of a transformer brings its own problems: increased weight; the possibility of saturation and harmonic generation; or introduction of even more inductive reactance, from its leakage reactance, which necessitates shortening the antenna more than the customary 5 percent to achieve resonance.

The next step involves replacing the dipole with its equivalent (resonant) circuit as seen at its center where the voltage is least and the current is maximum. See **figs. 1, 2,** and **3**.

The magnitude of the various components are:

$$Z_o = \sqrt{\frac{L}{C}}$$

where Z_0 = traveling wave impedance
where L = inductance per meter
and C = capacitance per meter
traveling wave velocity

$$v = \frac{1}{\sqrt{LC}}$$

Rearranging terms, the impedance exhibited by a wire can be expressed in terms of velocity and capacitance as:

$$Z_o = \frac{1}{vC}$$

Because the velocity of a traveling wave on a wire in air is almost equal to its free-space velocity (3 x 10^8 m/s) and the capacitance per meter of a 2-mm (0.08 inch) diameter wire is approximately 4.17 pF, then this same 2-mm diameter wire impedance is:

$$Z_o = \frac{1}{3 \times 10^8 \times 4.17 \times 10^{-12}} = 800 \text{ ohms}$$

The circuit can be considered to consist of two equal and opposite sign reactances (800 ohms) that correspond to two oppositely traveling waves, and a shunt

Maurice C. Hately, GM3HAT, 1 Kenfield Place,
Aberdeen AB1 7UW, Scotland, UK.

resistance that represents total losses (mainly attributable, one would hope, to radiation into space). The half-power bandwidth of a half-wave dipole is 9.3 percent of the nominal resonance frequency.[5] Q is the reciprocal of the percentage bandwidth or equal to $1/0.093 = 10.7$ (for a length-to-diameter (L/D) ratio of 10,000 and a height above ground of $\lambda/4$). The shunt loss resistance value (i.e., radiated power) in parallel resonance is reactance times Q or $800 \times 10.7 = 8.56$ k. On the other hand, the series equivalent "loss" resistance (series resonance) is 800/10.7, or approximately 73 ohms. **Figure 4** shows the complete parallel equivalent circuit. **Figure 5** shows the next progression, developed by splitting all three terms, which enables one to place at this location a virtual ground or balance point. Next, **fig. 6** shows the actual induction field couplings which exist from end to end. M shows the magnetic field and E shows the antiphase electric field coupling. (The electric field has two 180-degree out-of-phase components that are at the same time out of phase with the current maxima and magnetic field. In other words, the energy stored in the resonant system of the antenna has either most of its energy in the electric field, or a quarter of a cycle later in time, in the magnetic field.) These are not small effects — in fact. they are considerable and must therefore always be taken into account.

If Kraus had drawn the half-wave dipole in this way, he would have shown it as it appears in **fig. 7**.[4] The extra -j42 ohms required for resonance, and the necessity for some balun in order to properly feed the coaxial cable, led me to decide to put in series two equal-value capacitors of -j21 ohms reactance and to feed the power across one of them as shown in **fig. 8**. The coaxial shield is now connected to the *electric field* center of the antenna. When first tried, this arrangement immediately showed promise in the removal of most of the local hash from machines, TV sets, and computers. But the VSWR on the feeder could not be reduced below 2:1 no matter what value capacitors were tried, or at which length or frequency the antenna was operated. Some of the problems must have been attributable to the unwarranted connection

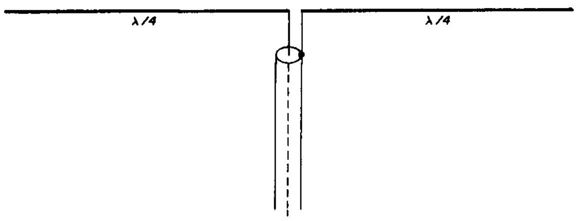

fig. 1. Traditional coax-fed half-wave dipole.

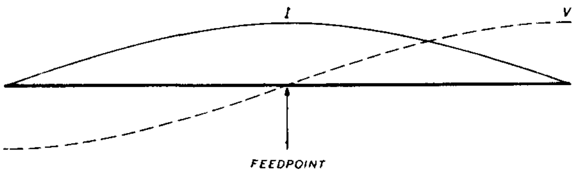

fig. 2. Symmetry of field conditions around basic dipole.

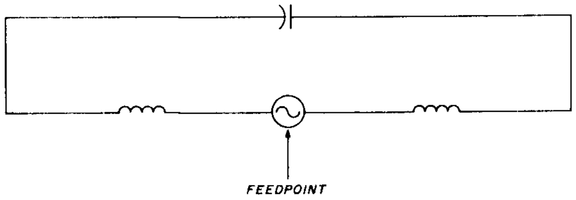

fig. 3. Equivalent resonant circuit of basic dipole.

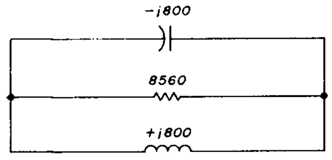

fig. 4. Parallel resonant circuit equivalent to practical dipole.

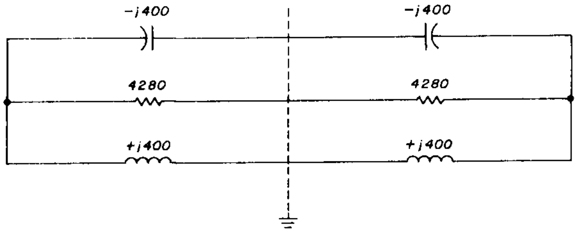

fig. 5. Equivalent circuit symmetrically splitting all three terms.

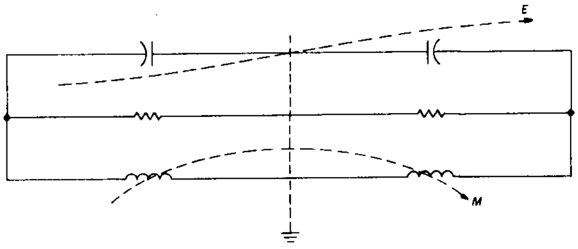

fig. 6. Equivalent circuit with accompanying symmetrical field.

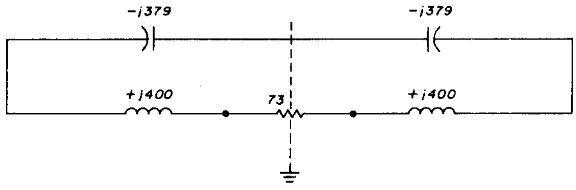

fig. 7. Symmetrical equivalent circuit with losses transformed to feed point.

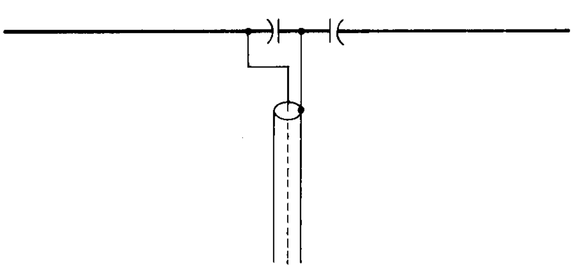

fig. 8. Basic capacitive balun system.

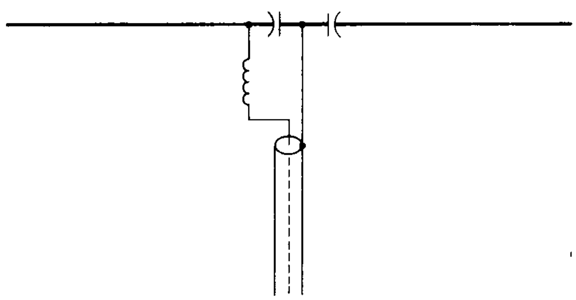

fig. 9. Additional inductor to correct feedpoint impedance; monoband antenna.

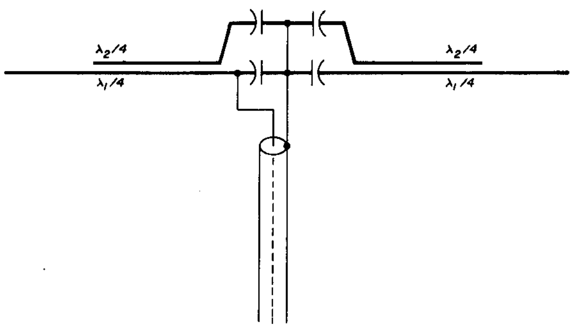

fig. 10. Alternative correction technique; multiband antenna.

of a capacitor of only 21 ohms across a 50-ohm feeder. It turns out that there are two solutions to this problem: you can install a series inductor before the capacitor (see **fig. 9**) or use a second resonant circuit, thereby making the antenna a dual-band radiator (see **fig. 10**). This approach extended its operating on two, three, four, or even five bands with low SWR, while still providing a balanced structure — hence the name, "Dipole of Delight," under which these capacitor dipoles are sold.

The additional reactance needed in the capacitive balun of the monoband dipole helped match the transmission line (50 ohms) to 800-ohm characteristic impedance of the antenna wires. It turns out that the optimum capacitive reactance is -j50 ohms (see **fig. 11**). If this is redrawn as a single-ended equivalent, all the components must be scaled down by a factor of $1/\sqrt{2}$ (This is due to the sharing of the load in the two halves and the doubling of the impedance on return to a dual, or balanced form (**fig. 12**). After slight rearrangement (**fig. 13**), the two capacitors are seen

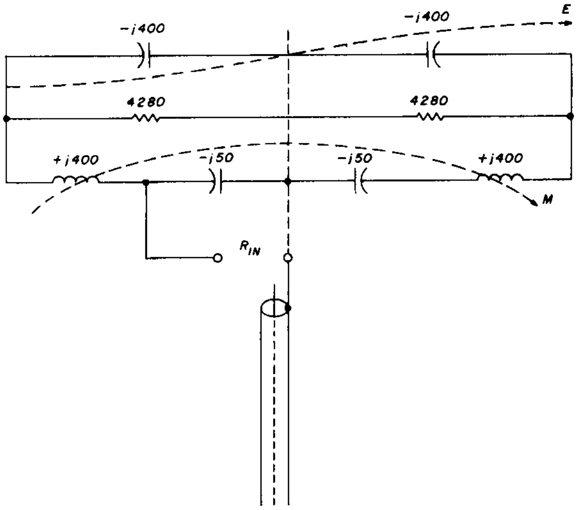

fig. 11. Optimum reactance values in parallel equivalent circuit of dipole.

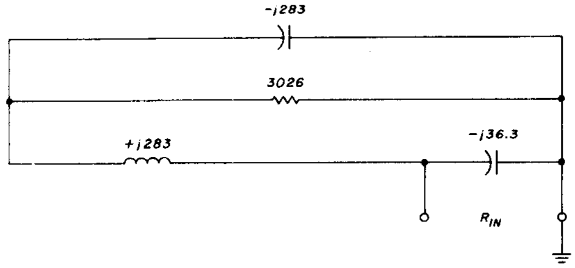

fig. 12. Rearrangement to show all losses transferred to one side of ground point.

as a capacitive autotransformer that works efficiently because of the considerable circulating current **I**. The equivalent inductive autotransformer is shown in **fig. 14**. The input resistance seen by the source is

$$3026 \times \left(\frac{36.3}{283}\right)^2 = 49.7 \text{ ohms}$$

Figure 15 shows a series inductive reactance of almost j50 ohms. This is needed to cancel out the equal and opposite capacitive reactance of 50 ohms, leaving a pure resistive termination of approximately 50 ohms. The *Q* of this resonant circuit is 1, and consequently does not affect the overall bandwidth of the system. The antenna bandwidth is determined by the *Q* of the dipole (10.7). As **table 1** shows, the input impedance is a genuine 50 ohms over a considerable bandwidth.

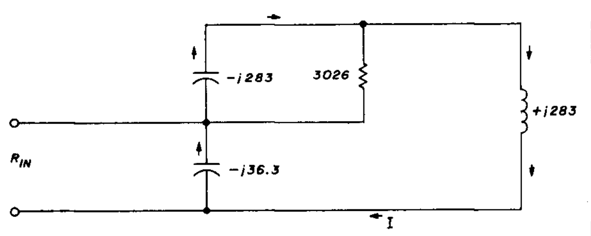

fig. 13. Circuit redrawn to show capacitive autotransformer.

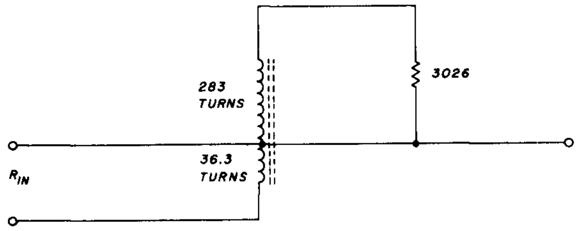

fig. 14. Analogous inductive autotransformer.

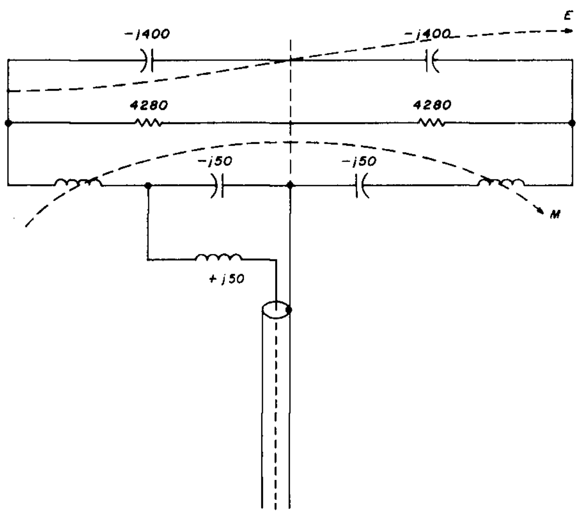

fig. 15. Full equivalent circuit; inductor-corrected capacitive balun monoband antenna.

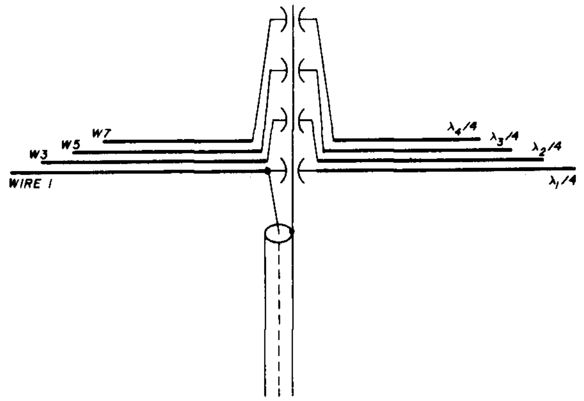

fig. 16. Four-band antenna.

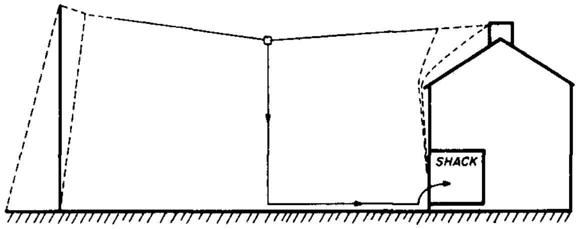

fig. 17. Preferred route of coax feeder.

Table 1. Input impedance is a genuine 50 ohms for a considerable bandwidth.

Frequency (MHz)	VSWR
13.7	1.45
13.8	1.25
13.9	1.14
14.0	1.08
14.1	1.03
14.2	1.02
14.3	1.07
14.4	1.13
14.5	1.22
14.6	1.30
14.7	1.40
14.8	1.50

This second solution — i.e., the addition of a second, third, or fourth resonant system with voltage dividing capacitors, as shown in **figs. 10** and **16** — works by inducing current in the resistive components by inductive coupling from left-hand-traveling current in wire 1 to right-hand-traveling current in wire 2 into capacitor 2, and so on. **Table 2** gives the measured SWR values for a four-band antenna for the older hf Amateur bands. The system is not harmonic-dependent however, as can be seen in **table 3**, which lists data for a production version for the WARC Amateur bands.

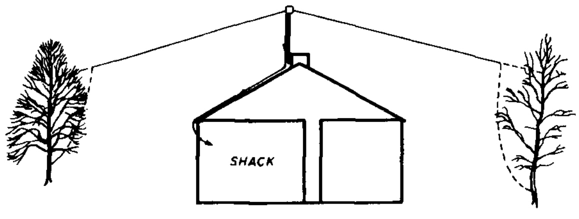

fig. 18. Route of chimney-supported inverted V.

Figure 19 shows the Smith chart display of the input impedance of a four-band Dipole of Delight when fed through approximately 50 feet of transmission line. The dot at the exact center of the chart represents exactly 50 ohms. Notice how closely the curve approaches this point for the 40, 20, 15, and 10-meter Amateur bands. **Figure 20** illustrates the effect with the feeder length canceled out. The equipment used for these experiments was a Hewlett-Packard Network Analyzer Model 8407A sweeping from 1 to 33 MHz.

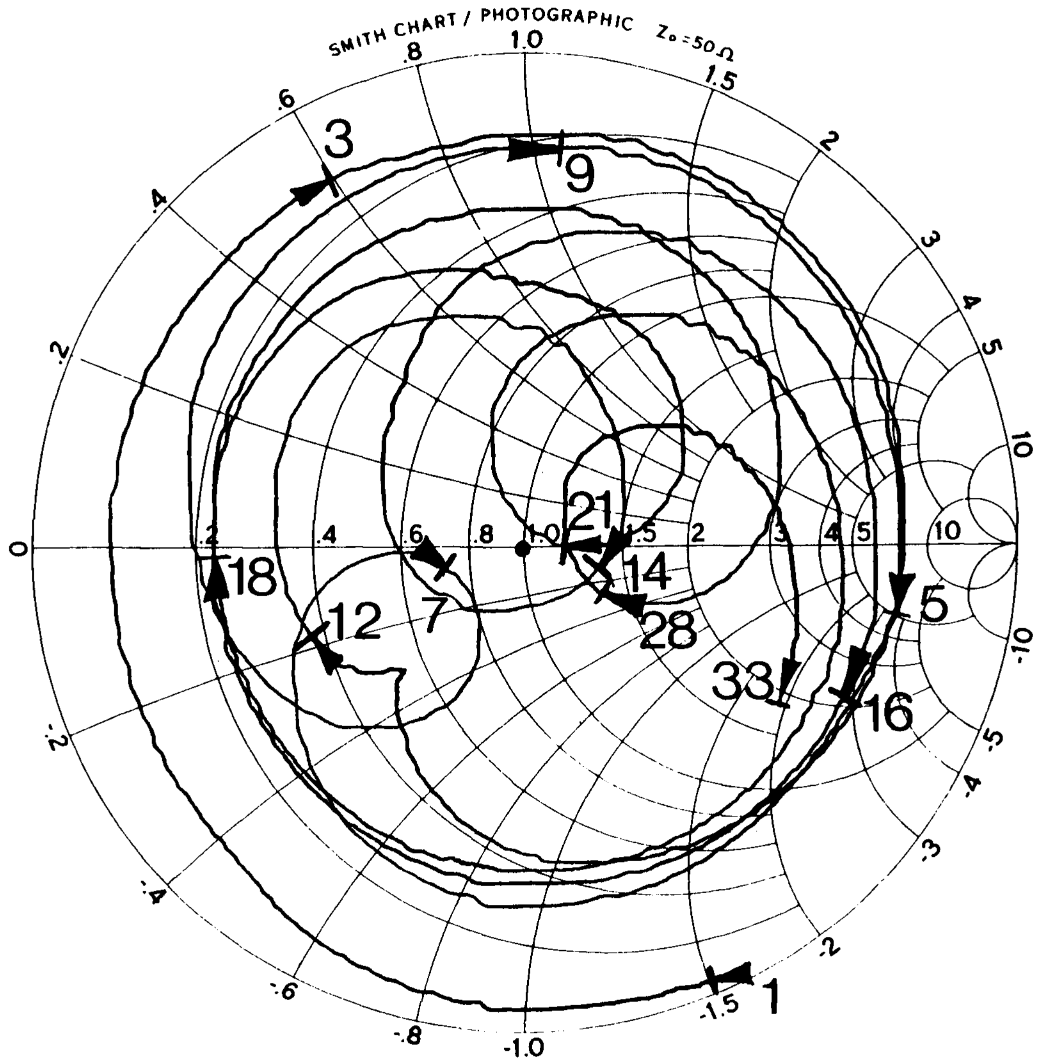

fig. 19. Input impedance of a four-band antenna at height of 8 meters (approx. 27 feet), fed by coax 15 meters (approx. 49 feet) long.

Table 2. Measured SWR values for a four-band antenna for the older hf Amateur bands.

Frequency (MHz)	VSWR
7.00	1.3
7.05	1.2
7.10	1.3
7.15	1.4
7.20	1.6
14.0	1.32
14.1	1.15
14.2	1.20
14.3	1.30
14.35	1.45
21.0	1.3
21.1	1.15
21.2	1.15
21.3	1.25
21.4	1.37
28.0	1.62
28.2	1.45
28.4	1.22
28.6	1.05
28.8	1.35
29.0	1.55

Table 3. Measured SWR values for a production version for the WARC Amateur bands.

Frequency (MHz)	VSWR
9.9	1.45
10.0	1.3
10.1	1.18
10.2	1.25
18.0	1.25
18.1	1.15
18.2	1.20
18.3	1.32
24.8	1.38
24.9	1.12
25.0	1.08
25.1	1.22

capacitor construction

The capacitors consist of etched double-sided epoxy-glass-fiber circuit board. One side is not etched at all and is connected to the coaxial cable shield. The other side is etched, leaving copper patches (in pairs) of sufficient size to provide the needed capacitance for each wire. The glass fiber acts as the dielectric of the capacitor. In this way a lightweight capacitor balun without too much wind-catching area and usable at a kilowatt PEP level can be made from single-layer pc board. The only reported failures have been thought to be due to lightning flashover across the unconnected right-side wires to the shield. A solution to this problem is presently being investigated. For medium powers — up to 100 watts of rf power output — lumped silver mica capacitors are used. These are easily concealed in a small center connector assembly which presents a negligible wind load. **Photo A** shows the center card and UHF connector and cable hanging from the water-shedding cowl.

ATU not needed

Since the VSWR is so close to 1:1 on 40 through 10, there's no need for an ATU between the transmitter and the antenna. This feature provides the freedom to QSY rapidly in a competitive situation without wasting time retuning. For blind or handicapped operators, it offers considerably simplified operation. For

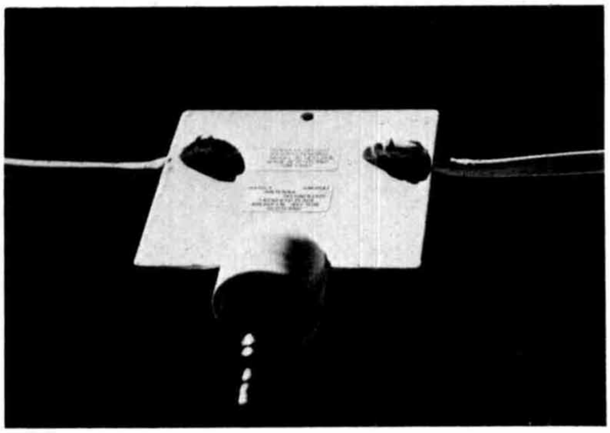

Photo A. Capacitor card of a three-band Dipole of Delight for 14, 21, and 26 MHz.

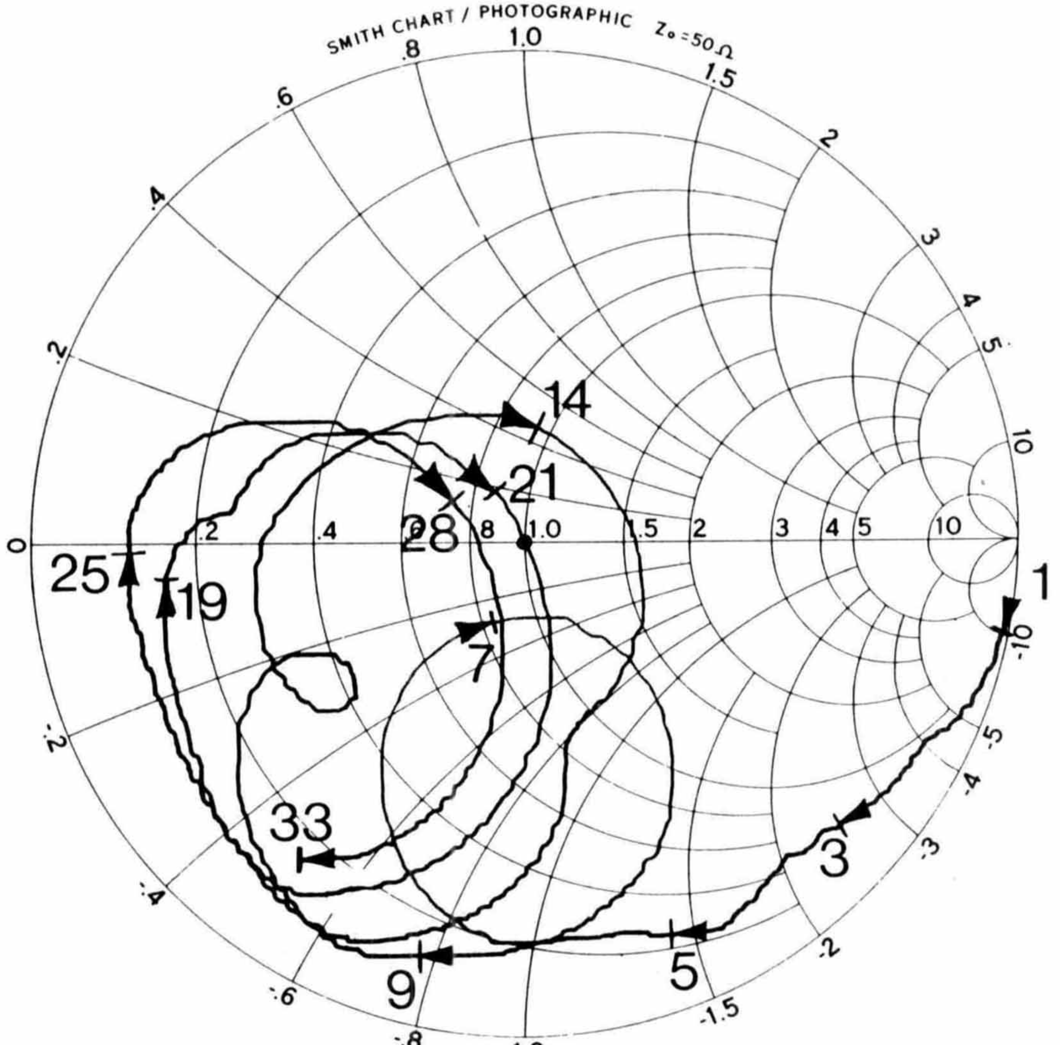

fig. 20. Antenna feedpoint input impedance as shown in fig. 19, but with effect of feeder cable counterbalanced out.

use with a no-tune semiconductor PA or linear, no antenna system could be more appropriate. The VFO is the only control that has to be moved!

Electrically, it's advantageous to have the shield of the coaxial cable at the rf zero potential right down to the shack. It should be emphasized that in order to preserve the balance, the cable should come away from the dipole at right angles until the feeder gets to an object such as the ground beneath the antenna, a tree, or a garage roof, for example, where it may then be turned to run to the shack along the same earth boundary (see **figs. 17** and **18**). This helps reduce VSWR. Observe SWR as shown in **fig. 17**, then pull the feedline to the side and watch the SWR rise from 1.02:1 and go up to 1.3:1. With the thorough balance of the Dipole of Delight it's never necessary to ground the case of the transceiver. There's a complete absence of rf feedback to the microphone and electronic keyer, and never any sign of "hand capacitance."

Because the feedline is at rf zero voltage right to the center balun unit, the Dipole of Delight works well as an inverted V. The support can be metal or any other material and there will be no effect on VSWR or radiation pattern.

helps TVI

Since no current flows down the outside of the feedline, no vertical polarization rf currents are induced into the downleads of nearby TV antennas. One disabled GM operator for whom ham radio is his main daytime activity (he tells me he is on 40 and 80 meters for 8 to 10 hours every day and likes to use his linear all the time) has found that a dual-band Dipole of Delight has not only cured TVI and BCI next door, but has also cured interference to an electronic organ at a church across the street. Now he can operate on Sunday mornings as well! We don't promise purchasers that TVI will be less than they've had with other antennas; in fact, the ground plane versions of these antennas[1],[3] are definitely *not* recommended where TVI is a problem, though they are nevertheless useful for low-angle radiation, of course.

references

1. M. C. Hately, GM3HAT, "Multiband Dipole and Ground Plane Antennas," Patent Application No. 81 27439, September 10, 1981. (Granted UK Patent No. 2 112 579 and USA No. 4,518,968 from this priority date.)

2. M. C. Hately, GM3HAT, Lecture at Scottish Amateur Radio Convention, "Multiband Dipole and Ground Plane Antennas," Glenrothes, September 12, 1981.

3. M. C. Hately, "Multiband Dipole and Ground Plane Antennas," IEE Conference Proceedings No. 245, pages 102-106. (Lecture to IEE International Conference on HF Communications Systems and Techniques, February, 1985.)

4. J. D. Kraus, W8JK, *Antennas*, McGraw-Hill, 1948. (See Equation 10.59.)

5. L. A. Moxon, *HF Antennas for All Locations*, Radio Society of Great Britain, 1982, page 122.

6. National Research Development Corporation, British Technology Group, 101 Newington Causeway, London SE1 6BU.

ham radio